OFO *series*

***Chinook** Electric Furnace - Discontinued*

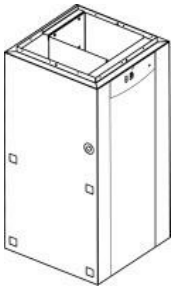

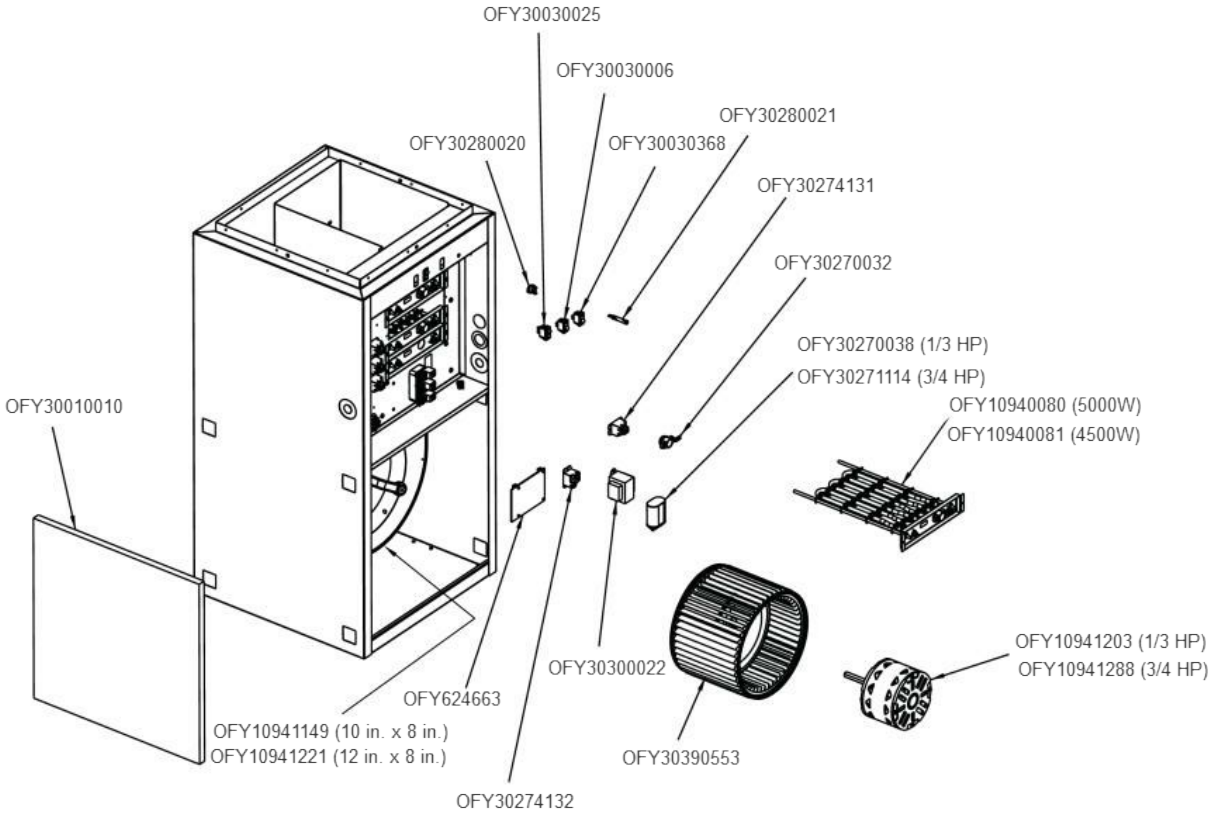

OFY624664 (item not shown)