OSM *series*
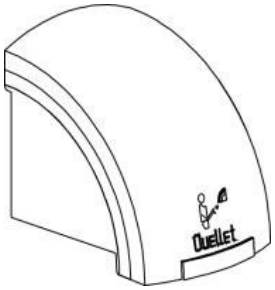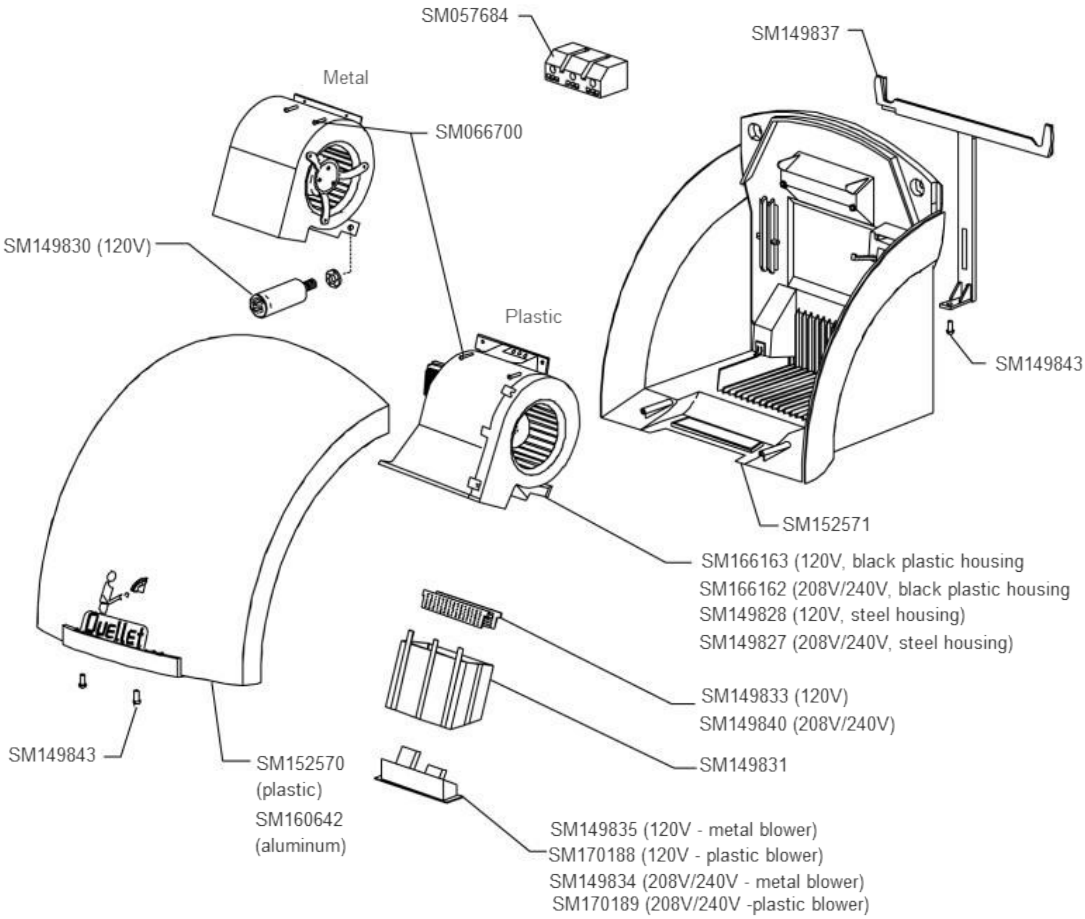
Former OSM Series Hand Dryer - Discontinued