OTP-E *series*
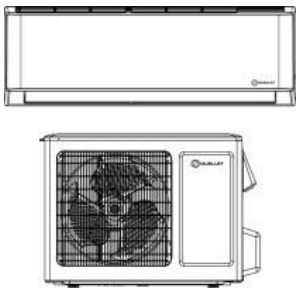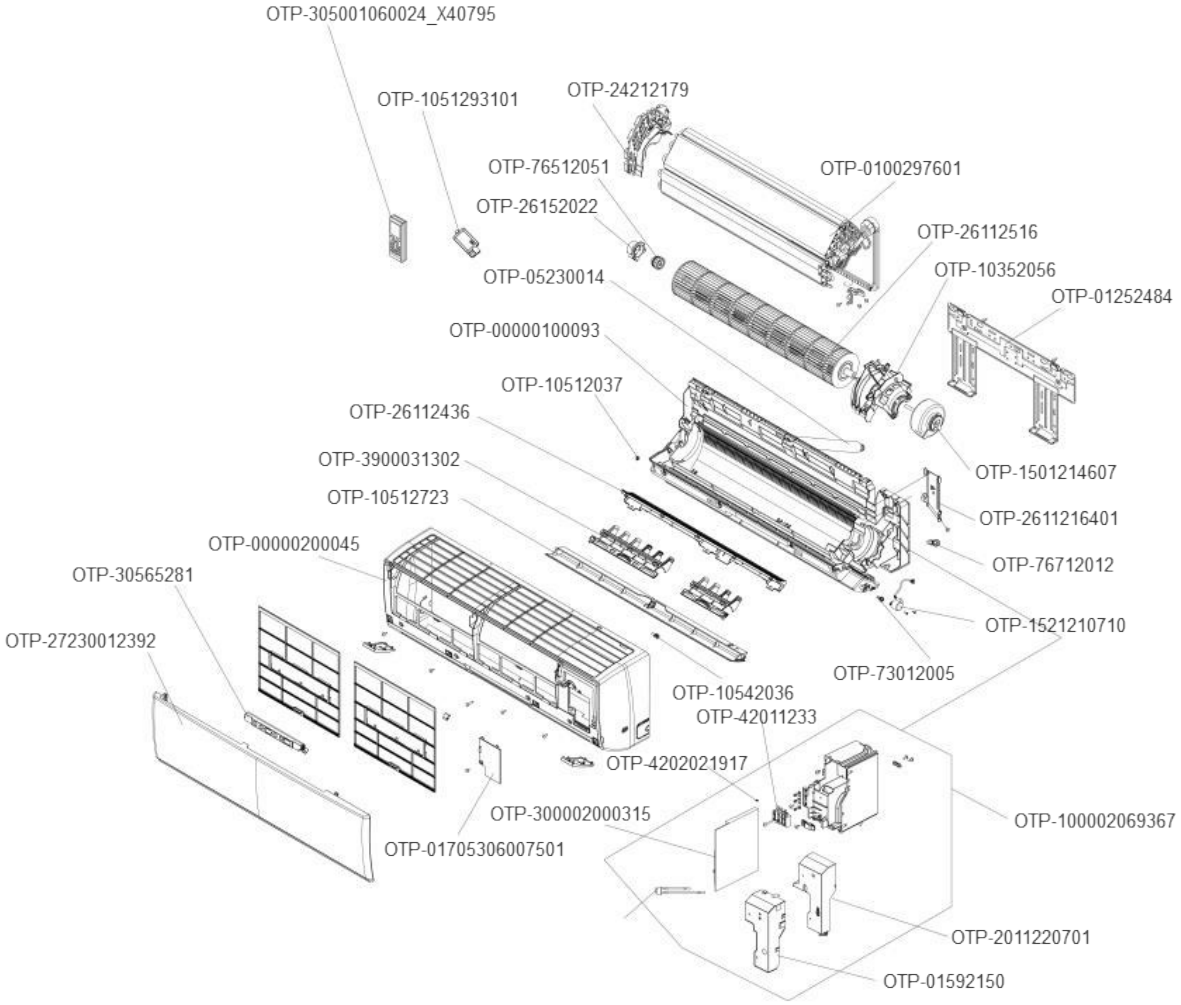
***Eagle** Ductless Single Zone Heat Pump*