OAC *series*

Commercial Wall Heater

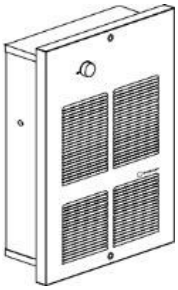

1-phase Unit

AC35B0000 (1500W/1PH to 4800W/1PH)

6900000011 (6000W/1PH to 8000W/1PH)

AC53J0000 (9000W to 12000W)

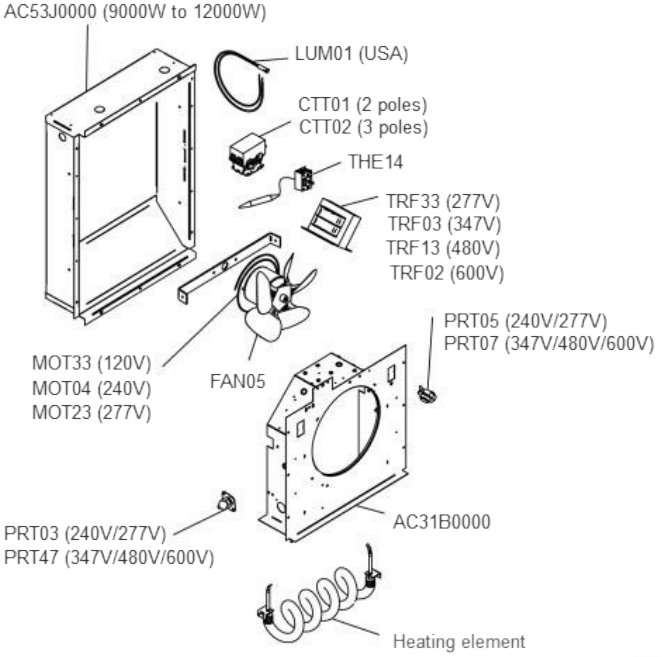

3-phase Unit

AC140B0000 (3000W/3PH à 5000W/3PH, single unit)

AC142B0000 (6000W/3PH to 8000W/3PH, double unit)

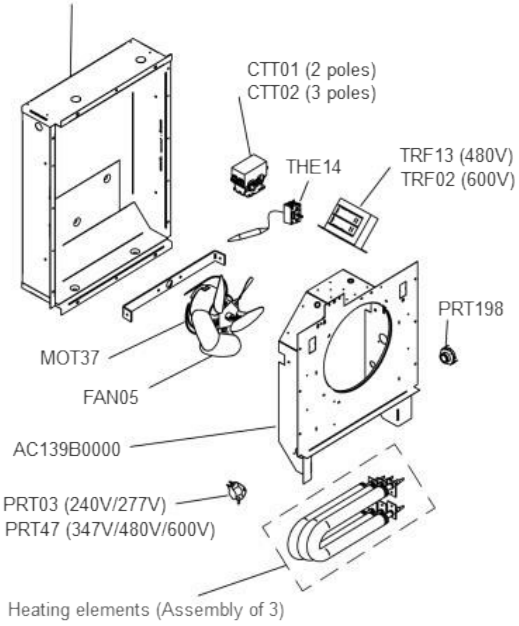

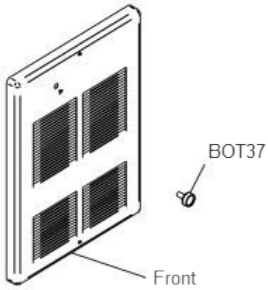

Amp	Fusible *Fuse*	Porte fusible *Fuse holder*	
		Avant le 14 août 2013 *Before August 14, 2013*	After le 14 août 2013 *After August 14, 2013*
15	FUS02	FUS03	FUS07
30	FUS09	FUS07	FUS07

Unité *Unit*	Devant *Front*
Simple / Single	AC07B0000DS*
Simple / Single 4800W-5000W	AC29B0000DS*
Double	AC11B0000DS*
Triple	AC14B0000DS*

* Couleurs sur mesure disponibles sur demande. / Custom colors available upon request.
** 12000W/1PH et tous les modèles 3PH. / 12000W/1PH and all 3PH models.

Watts (PH)	Élément chauffant *Heating element*						
	120V	208V	240V	277V	347V	480V	600V
1500 (1)	ELO114	-	ELO71	ELU32	ELO66	ELU71	ELO67
2000 (1)	-	ELO72	ELO47	ELU20	ELO50	ELU24	ELO53
3000 (1)	-	-	ELO48	ELU21	ELO51	ELU25	ELO54
3000 (3)		4502500005	4502500008			4502500010	4502500013
4000 (1)	-	ELO46	ELO49	ELU22	ELO52	ELU26	ELO55
4000 (3)		4502500006	4502500005			4502500011	4502500014
4800 (1)	-	ELU30	ELU31	ELU33	ELO107	ELU58	ELO106
5000 (3)		4502500007	4502500009			4502500012	4502500015
6000 (1)	-	-	ELO48	ELU21	ELO51	ELU25	ELO54
6000 (3) unité triple / triple unit	-	ELO72	-	-	-	-	ELO53
6000 (3) unité double / double unit	-	4502500005	4502500008	-	-	4502500010	4502500013
8000 (1)	-	ELO46	ELO49	ELU22	ELO52	ELU26	ELO55
8000 (3) unité double / double unit	-	4502500006	4502500005	-	-	4502500011	4502500014
9000 (3)	-	ELO49	-	-	-	-	ELO54
12000 (1)	-	ELO46	ELO49	ELU22	ELO52	ELU26	ELO55
12000 (3)	-	ELO46	-	-	-	ELU26	ELO55