OTP-A *series*
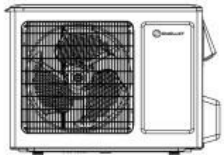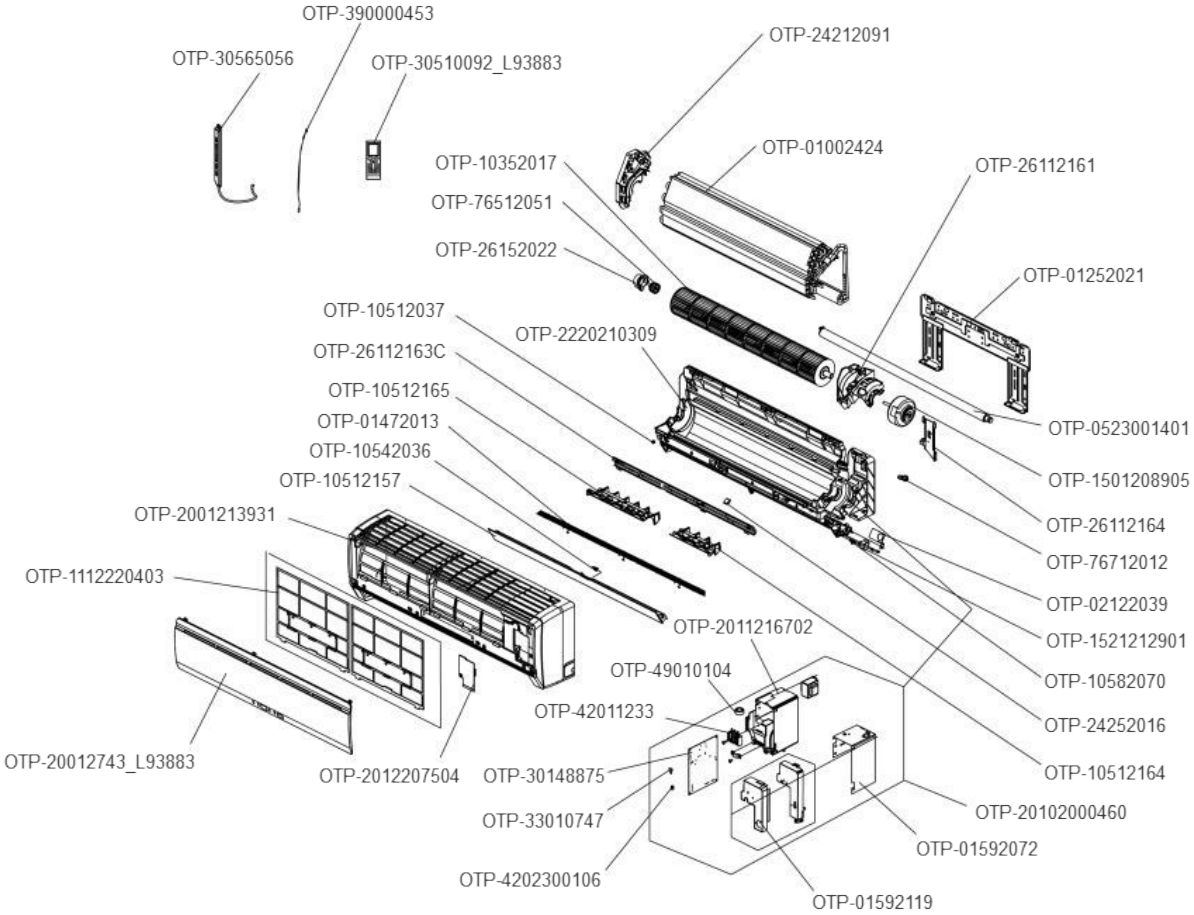
***Aura** Ductless Single Zone Heat Pump*