OCP *series*
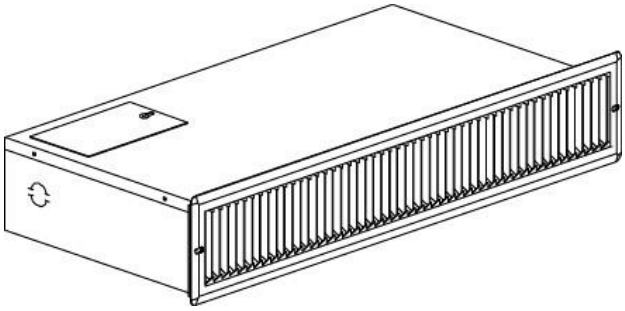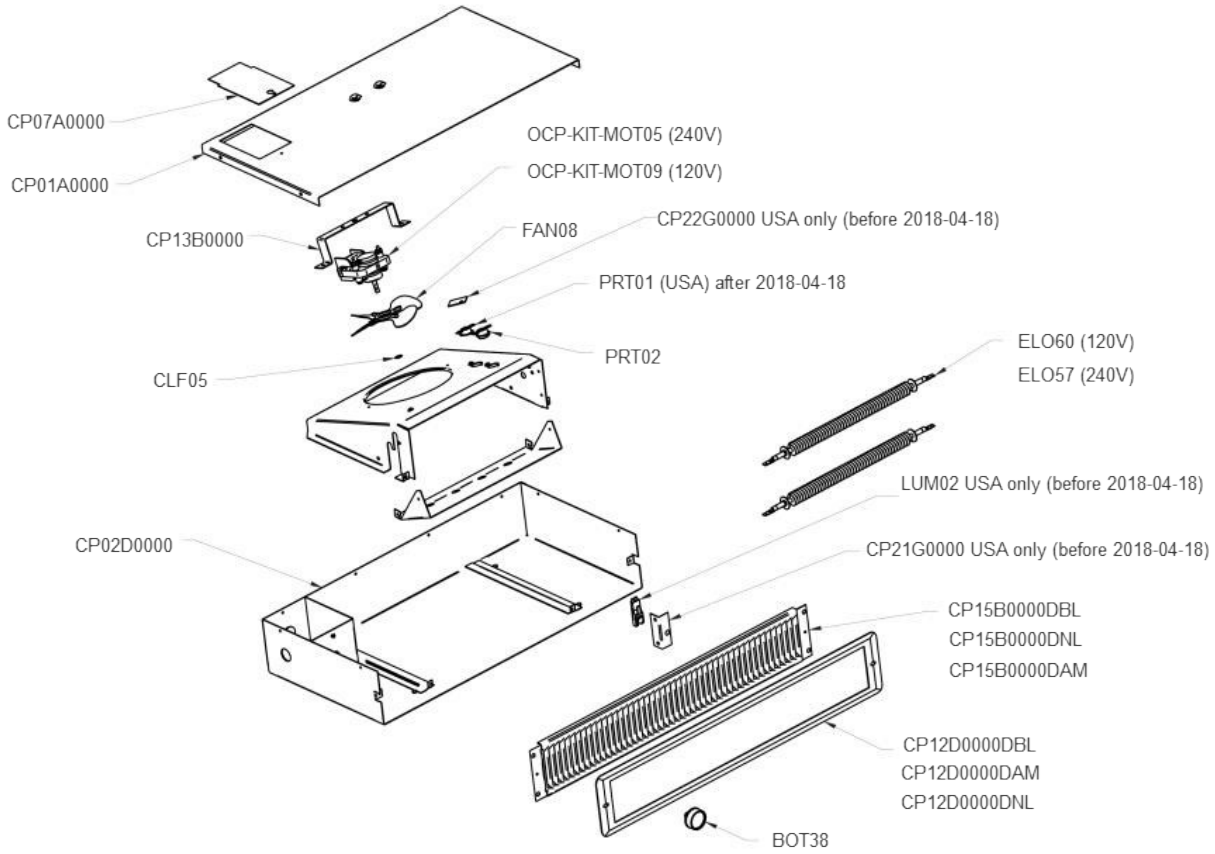
Kickspace Heater