OSM-SD *series*

SMARTdriTM Plus *Versatile Hand Dryer*

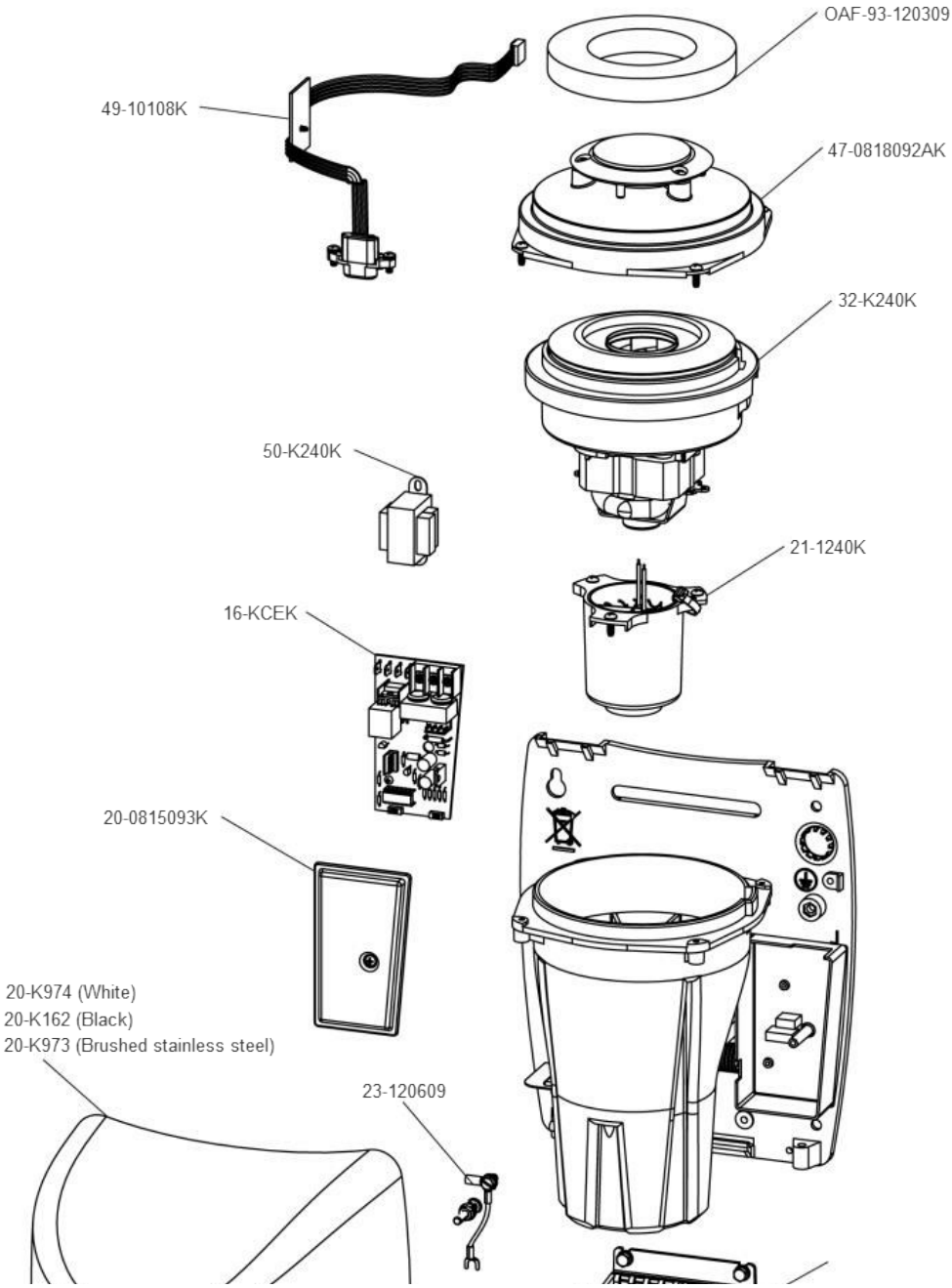

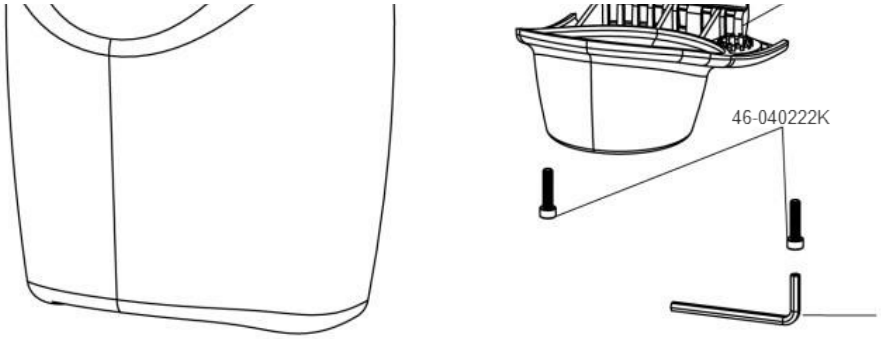
46-040222K