OTP-O *series*
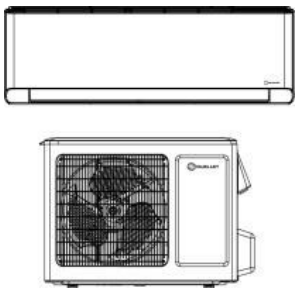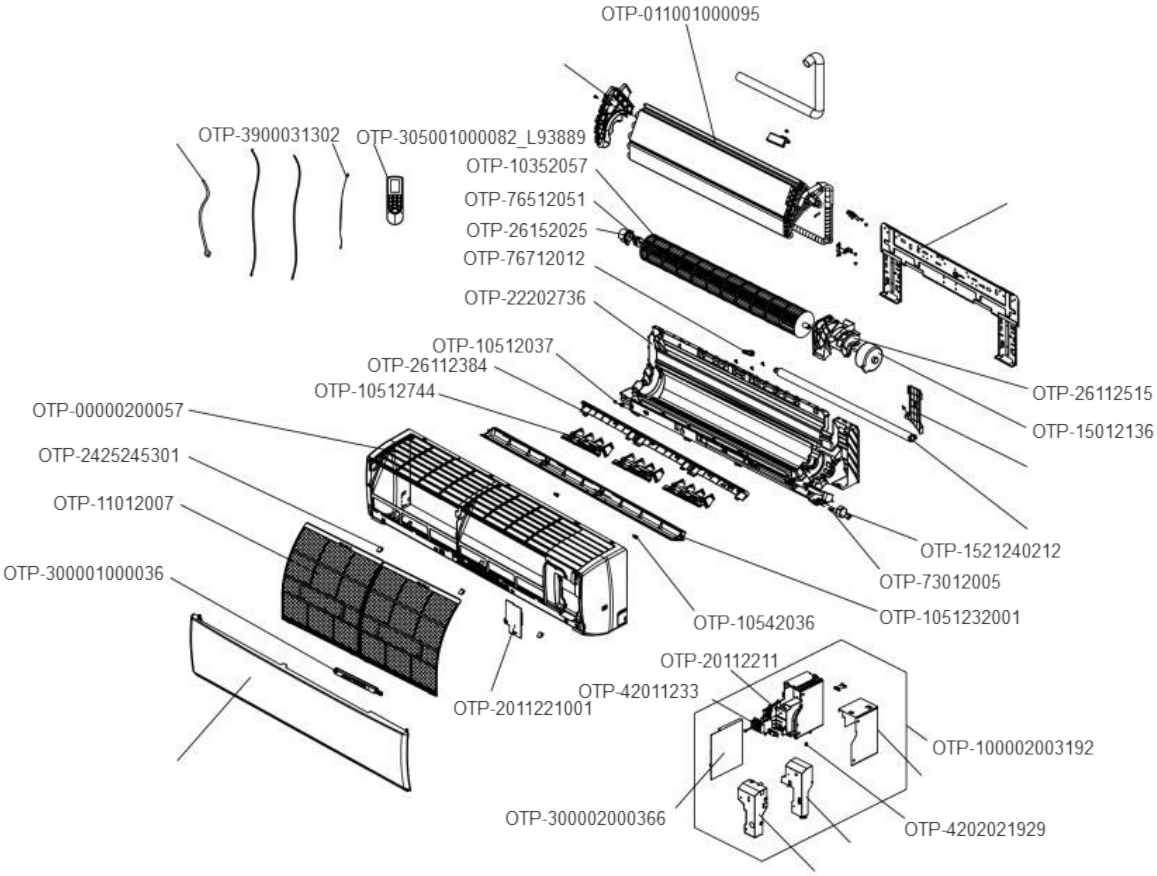
Olympia *Ductless Single Zone Heat Pump*