OTP-O *series*
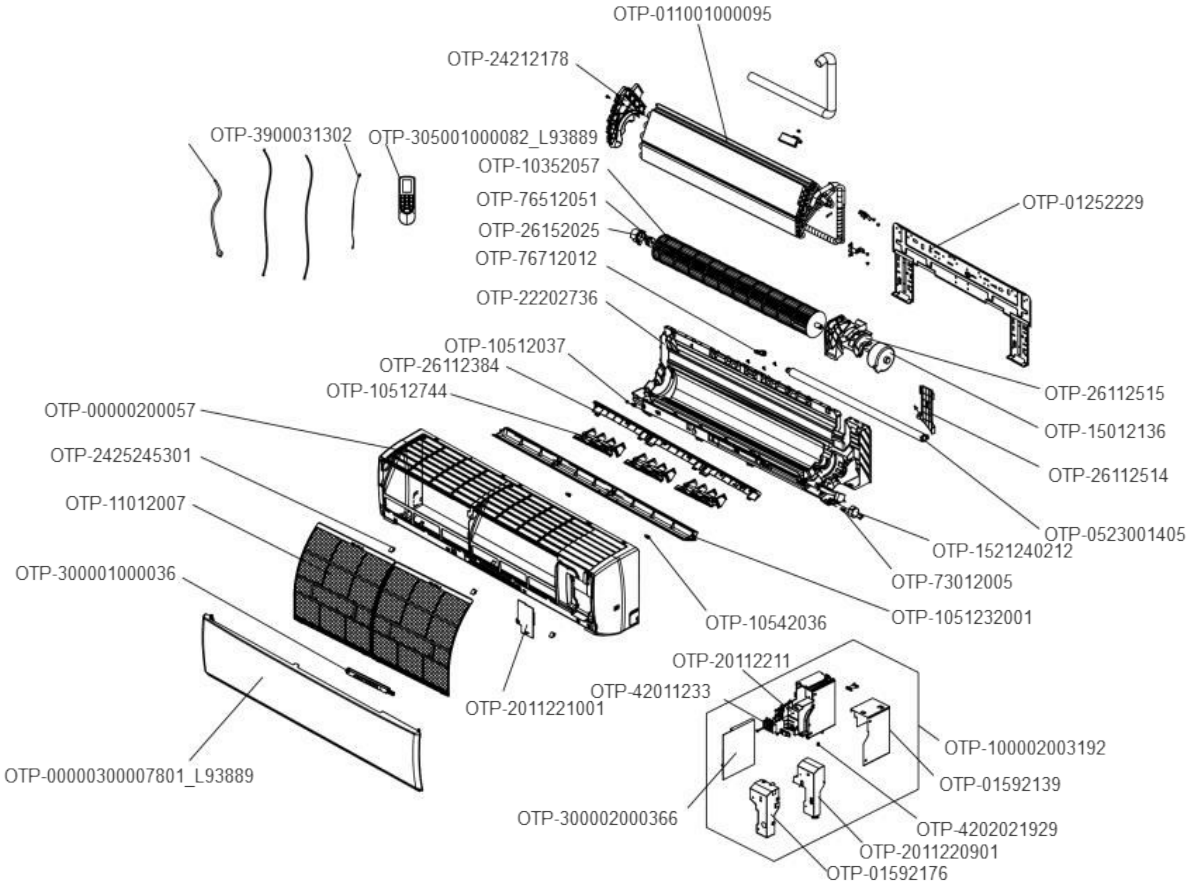
***Olympia** Ductless Single Zone Heat Pump*