OTP-C *series*
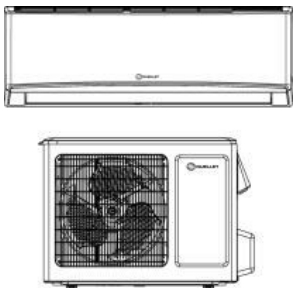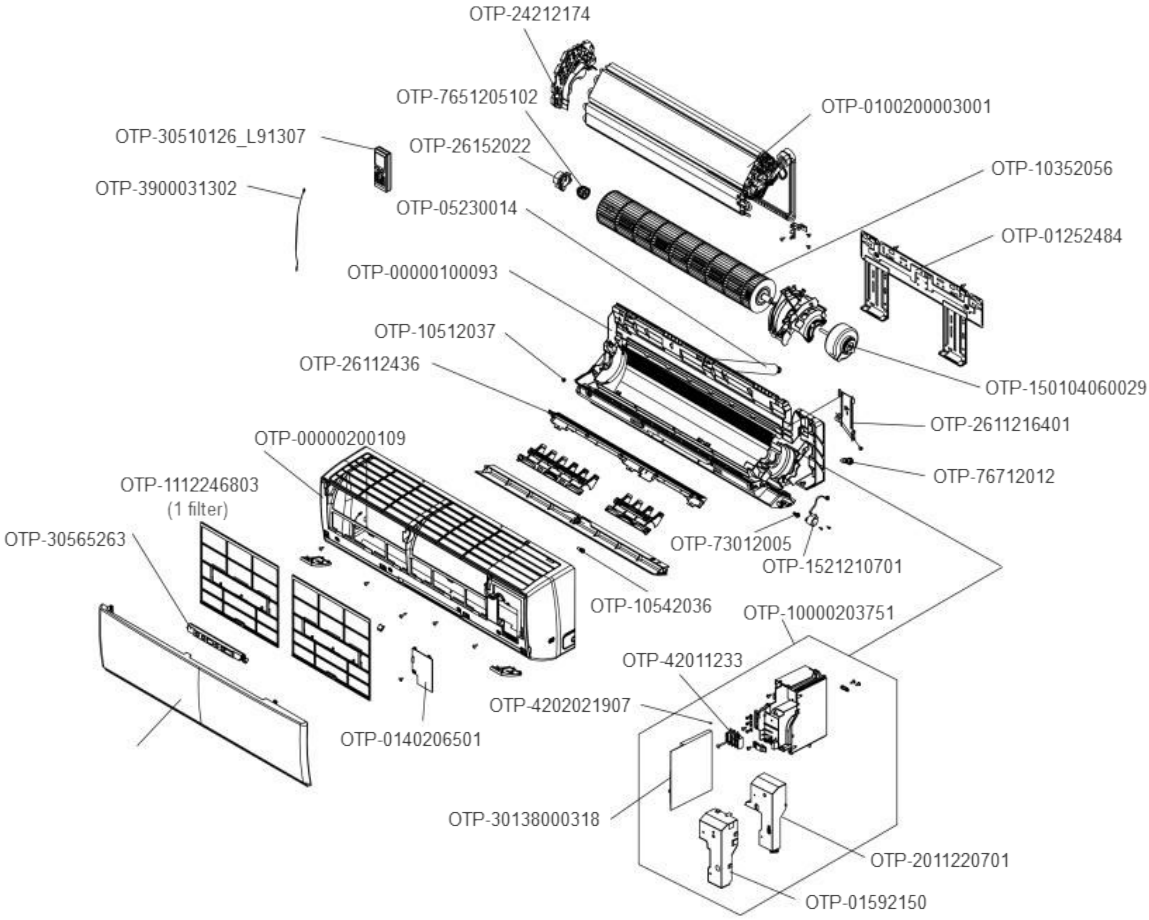
Champagne *Ductless Single Zone Heat Pump*